Dual Mount Kitchen Sink
DM-33229D2

DM-33229D2

Features:

Stainless Steel
Dual Mount
Overall Size: 33" x 22" x 9"
Bowl Sizes: 15" x 18" x 9"
Material: SUS-304 Stainless Steel
16 Gauge
Stone Guard Undercoated
Brushed Finish
Template and Fastener Clips Included
Weight: 20 lbs

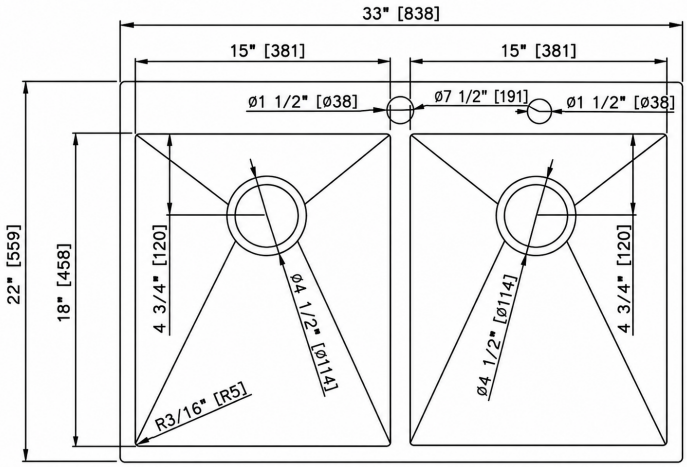

Optional Accessories Sold Separately:

DM-3322D-BSG (Bottom Sink Grid)
BD-1 (Basic Drain)

Available Sink Options:
Model# DM-33229S1

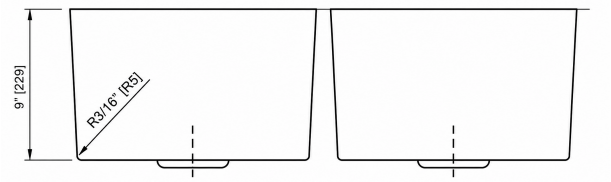

For more information call 619-320-5621 or email sales@carchelledistribution.com